EMERSON UNIVERSITY OF MULTAN

Lab Task (2):

Study and Preparation of Twisted Pair Cable- Straight through and Cross Over

Submitted To:

Dr. Shahzad Bhatti

Submitted From:

Ali Muzamil

Subject: Computer Networking

Roll No: COSC241122205

BSCS-Evening (B)-4th semester

Section: 2024-2028

LAB #2:

STUDY and PREPARATION of TWISTED PAIR CABLE — STRAIGHT-THROUGH & CROSS-OVER

Objective

- To understand and create straight-through and cross-over Ethernet cables.
- To practice terminating cables with RJ-45 connectors.
- To test cable functionality.

Types of Cables

- **UTP (Unshielded Twisted Pair)**
  - Common for LANs

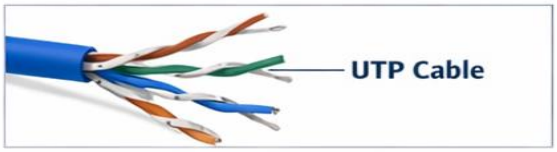

STP (Shielded Twisted Pair)

- Shielded to reduce interference

Wiring Standards

TIA/EIA-568 Wiring Standards		
Pin	**T568A**	**T568B**
1	White/Green	White/Orange
2	Green	Orange
3	White/Orange	White/Green
4	Blue	Blue
5	White/Blue	White/Blue
6	Orange	Green
7	White/Brown	White/Brown
8	Brown	Brown

Straight-Through Cable

*Connects PC to **Switch/Router***

Cross-Over Cable

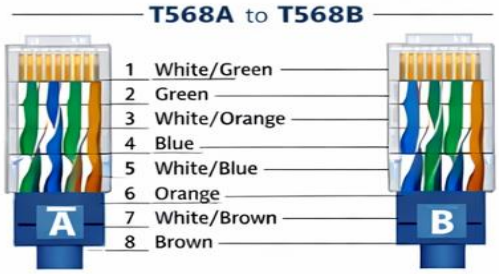

*Connects PC to PC / **Switch to Switch***

*Verify with **Cable Tester***

Study and Preparation of Twisted Pair Cable – Straight-Through & Cross-Over

Objective

- Understand the **structure, types, and purpose** of twisted pair cables in networking.
- Prepare and terminate **straight-through** and **cross-over Ethernet cables** accurately.
- Verify cable integrity and connectivity using a **LAN cable tester**.

Introduction

Twisted pair cables are one of the most used types of **Ethernet cabling** in modern networks. They consist of **pairs of copper wires twisted together** to reduce electromagnetic interference (EMI) and crosstalk, ensuring reliable transmission of data over the network.

Key features:

- Cost-effective, flexible, and easy to install.
- Used in **LANs (Local Area Networks)** to connect computers, switches, routers, and other network devices.
- Supports varying data transfer speeds: from **Fast Ethernet (100 Mbps)** to **10 Gbps (Cat6a)** depending on the cable category.

Cable Types:

1. **Unshielded Twisted Pair (UTP)** – No shielding, widely used in offices and homes.
2. **Shielded Twisted Pair (STP)** – Metal shielding reduces interference; suitable for industrial or high-EMI environments.

Proper understanding of twisted pair cabling is crucial for network installation, troubleshooting, and maintaining high-speed, error-free communication.

Ethernet Wiring Standards

Ethernet cabling follows **TIA/EIA-568 wiring standards** to maintain consistent pin alignment and ensure proper connectivity.

Pin	T568A Color	T568B Color
1	White/Green	White/Orange
2	Green	Orange
3	White/Orange	White/Green
4	Blue	Blue
5	White/Blue	White/Blue
6	Orange	Green
7	White/Brown	White/Brown
8	Brown	Brown

Straight-Through Cable

Definition:

A cable with **identical wiring on both ends** (T568A–T568A or T568B–T568B).

Purpose:

Used to connect **different types of devices**, such as:

- PC → Switch
- PC → Router
- Switch → Router

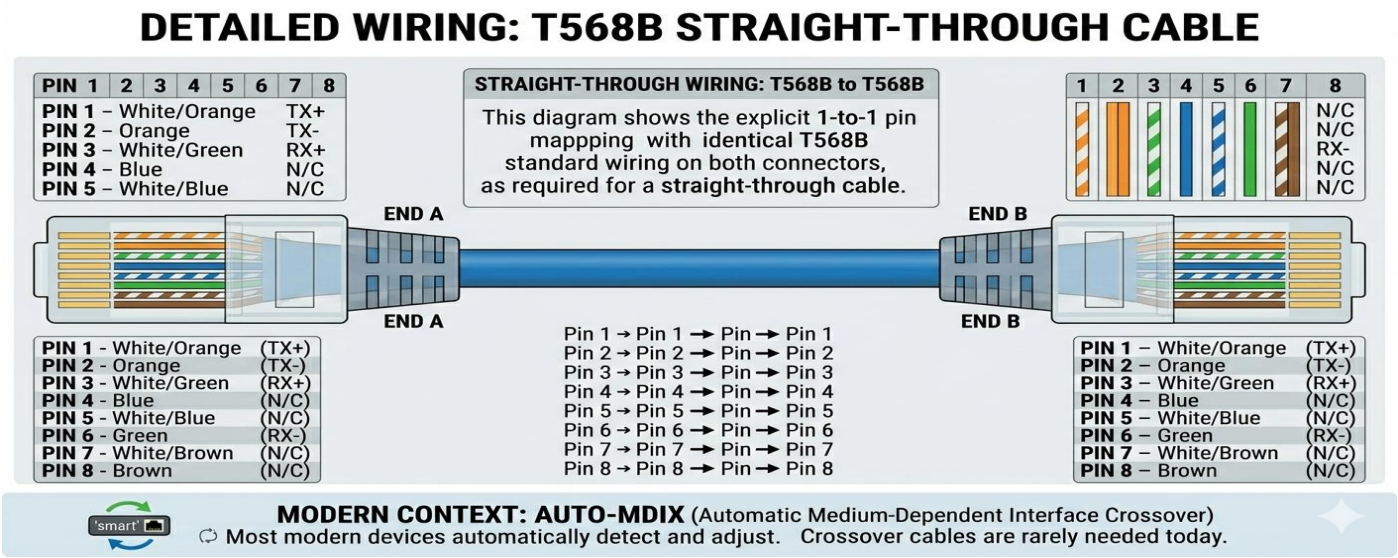

Cross-Over Cable

Definition:
A cable with **different wiring standards on each end** (T568A on one end, T568B on the other).

Purpose:
Used to connect **similar devices directly**, such as:

- PC → PC
- Switch → Switch
- Hub → Hub

Advantages:

- Eliminates the need for intermediate devices in direct connections.
- Crosses transmit and receive pairs to allow device communication without a switch or hub.

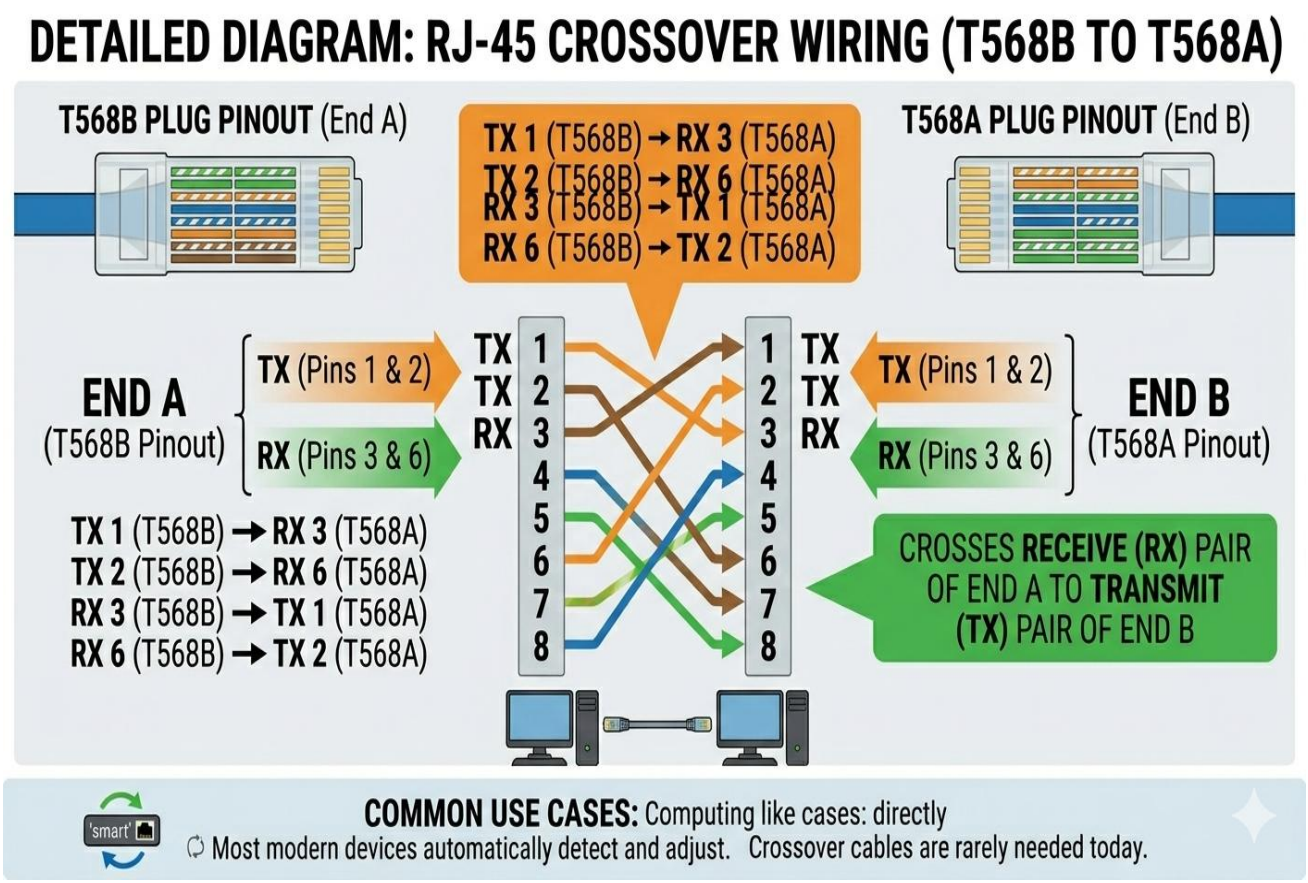

Tools and Materials

- **UTP Cable (Cat5e or Cat6)**
- **RJ-45 Connectors**
- **Crimping Tool**
- **Wire Stripper / Cutter**
- **LAN Cable Tester**
- **Protective Boots (Optional)**

Procedure

1. **Cable Preparation**
    - Cut cable to the desired length.
    - Strip ~2 cm of outer insulation without damaging inner wires.
2. **Wire Arrangement**
    - Untwist wire pairs and align according to chosen standard (T568A or T568B).
3. **Connector Termination**
    - Insert wires into the RJ-45 connector in proper order.
    - Ensure wires reach the front of the connector.
4. **Crimping**
    - Use a crimping tool to secure the connector.
5. **Cable Testing**
    - Use a LAN cable tester to verify continuity.
    - **Straight-through cable**: All pins align directly.
    - **Cross-over cable**: Transmit and receive pins cross correctly.

UNDERSTANDING LAN CABLE TESTER RESULTS: CORRECT CONTINUITY

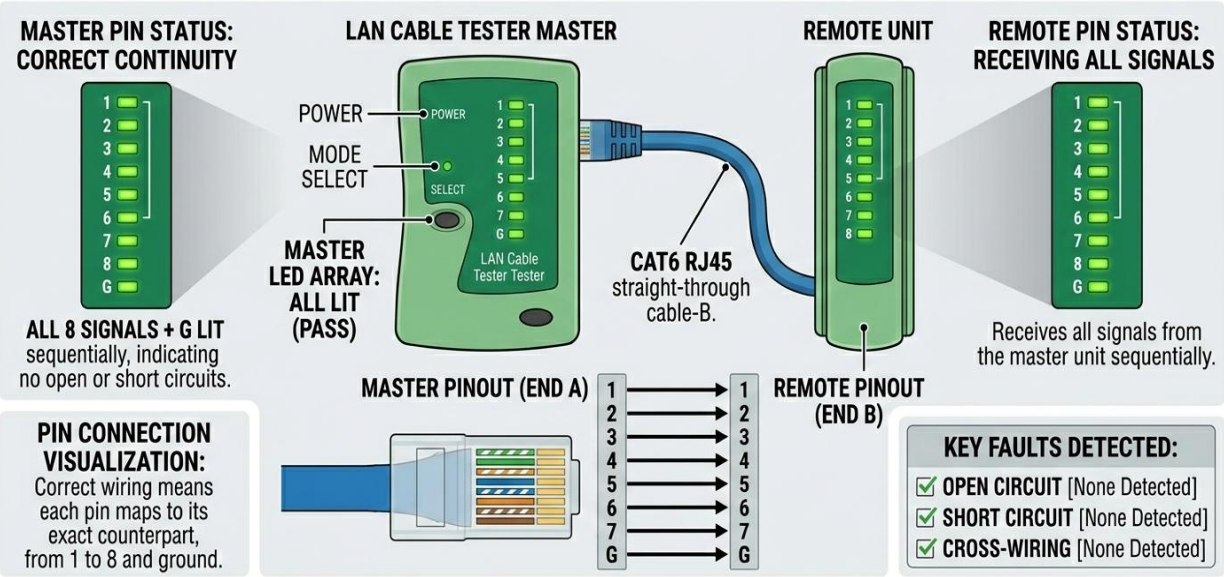

PIN CONNECTION VISUALIZATION:
Correct wiring means each pin maps to its exact counterpart, from 1 to 8 and ground.

KEY FAULTS DETECTED:

- ☑ **OPEN CIRCUIT** [None Detected]
- ☑ **SHORT CIRCUIT** [None Detected]
- ☑ **CROSS-WIRING** [None Detected]

'smart'

Modern context: Standard continuity ensures Gigabit Ethernet performance and simplifies network setup. Many older devices' issues (Auto-MDIX) rely on correct straight-through cabling for optimal function.